# Diffuse Scattering from Laser-Irradiated Plane Targets+)

C.G.M. van Kessel, J.N. Olsen*,
P. Sachsenmaier, R. Sigel,
K. Eidmann, R.P. Godwin**

~~PLF-IV/94~~ November 1976

IPP IV/94

MAX-PLANCK-GESELLSCHAFT
ZUR FÖRDERUNG DER WISSENSCHAFTEN E.V.
PROJEKTGRUPPE FÜR LASERFORSCHUNG
D-8046 GARCHING bei München/Germany

MAX-PLANCK-GESELLSCHAFT
ZUR FÖRDERUNG DER WISSENSCHAFTEN E.V.
PROJEKTGRUPPE FÜR LASERFORSCHUNG
D-8046 GARCHING bei München/Germany

# Diffuse Scattering from Laser-Irradiated Plane Targets+)

C.G.M. van Kessel, J.N. Olsen*,
P. Sachsenmaier, R. Sigel,
K. Eidmann, R.P. Godwin**

~~PLF-IV/94~~ November 1976

IPP IV/94

+) presented at the 10th European Conference on Laser Interaction with Matter, Ecole Polytechnique, Palaiseau, France, 18 to 22 October 1976

* on leave from Sandia Laboratories, Albuquerque, N.M., U.S.A.

** on Professional Research and Teaching Leave from Los Alamos Scientific Laboratory, Los Alamos, N.M., U.S.A.

*Diese Arbeit wurde gefördert durch das Bundesministerium für Forschung und Technologie und durch Euratom.*

PLF IV/94 C.G.M. van Kessel
J.N. Olsen*
P. Sachsenmaier
R. Sigel
K. Eidmann
R.P. Godwin**

# Diffuse Scattering from Laser-Irradiated Plane Targets+)

November 1976
in English

Abstract:

Optical calorimetry of the laser radiation scattered from plane targets irradiated by 0.3 Joule/30 ps Nd-laser pulses with intensities up to $10^{16}$ W $cm^{-2}$ has been performed with an emphasis on diffuse scattering. Diffuse scattering outside the solid angle of the focusing lens is found to be a major reflection loss from the target. A fraction of 0.3 to 0.5 of the incident pulse energy was absorbed in the target with only a very weak dependence on pulse energy and target material.

+) presented at the 10th European Conference on Laser Interaction with Matter, Ecole Polytechnique, Palaiseau, France, 18 to 22 October 1976

* on leave from Sandia Laboratories, Albuquerque, N.M., U.S.A.

** on Professional Research and Teaching Leave from Los Alamos Scientific Laboratory, Los Alamos, N.M., U.S.A.

## Introduction

In the context of laser fusion, reflection losses occurring on intense laser irradiation of solid targets are a subject of considerable interest. Whereas it is well known that part of the laser radiation may be backreflected from the target through the focusing optics, it is still unclear from past experiments to what extent scattering outside the solid angle of the focusing optics further reduces effective absorption. Furthermore, a contradictory and frustrating pattern of results has been reported which calls for more careful experimental investigations before light absorption and reflection processes in laser-produced plasmas may be properly understood. In this investigation we have attempted to measure accurately total "reflection", including diffuse scattering losses outside the solid angle of the focusing optics, and also to identify and control the experimental conditions to such an extent that reproducible results are obtained.

We restrict ourselves here to the presentation of the experimental results. We note only that a basic interest in diffuse scattering arises from the fact that it is intimately connected with absorption of laser radiation. A connection between roughness and absorption is familiar in metal optics, where surface roughness leads to enhanced absorption. Whereas it is plausible, on the basis of the results presented here, that an analogous situation persists in laser-produced plasmas; theoretical models are beyond the scope of this paper.

## Experimental Arrangement

The basic arrangement is shown in Fig. 1. Four detectors, each consisting of a diffuser: silicon PIN photodiode combination, measure the incident laser-pulse energy ($E_{inc}$), the energy backreflected through the lens ($R_L$), the energy transmitted by the target (T) and the energy of laser radiation scattered outside the solid angle of the focusing lens ($R_{diff}$). The plane target, adjusted accurately normal to the laser beam axis, and the detector $R_{diff}$ are located in the foci of a $2\pi$ ellipsoidal mirror of aluminum. The apex to focus distance is 40 mm and the distance

between the two foci is 400 mm. The light transmitted through the target is collected in a highly reflective tube and "piped" to the detector T. The collection angle for transmitted light slightly exceeds that of the beam divergence with no target.

The laser is a Quantel Nd-YAG laser consisting of a mode-locked YAG-oscillator, a Pockels-cell pulse selector, a YAG preamplifier, a dye cell for prepulse suppression, a spatial filter, 16 mm and 25 mm diam. glass amplifiers, a Faraday rotator, a 45 mm diam final glass amplifier and a second Faraday rotator. Whereas the system is guaranteed for a focusable 1,5 Joule/30 ps output, it was used in the present investigation at an output energy of only 300 mJ with a corresponding B integral of about 1. (i.e., we operated in a region where beam disturbances through nolinear optical effects should be insignificant.) The four-element F/2 Zeiss lens, designed for diffraction limited focusing of a parallel laser beam, concentrates half of the pulse energy into a focal spot with a diameter less than 10 µm. This was measured at full power (300 mJ) by imaging the focus with a second lens of the same type at a magnification of 200 x onto a circular aperture in front of a photodetector. The pulse duration of 30 ps, verified with an Electro-Photonics Streak camera, was held constant in this investigation. (The laser allows 30, 50, 100, 200 ps and 2 to 15 ns pulse duration). The appearance of double pulses was monitored with a Tektronix 519 oscilloscope.

Though the experimental arrangement is simple in principle, some delicate points should be mentioned. Calibration of the detector $R_L$ is relatively straight forward. (A 99.8 % reflectance dielectric mirror is inserted in front of the chamber and measurements of window and lens transmission are made; the result being crosschecked against low-intensity reflection from a copper target with good surface quality.) Nevertheless care must be taken with respect to losses of reflected radiation at the apertures of the beamsplitter and detector. The reflected radiation may have considerable divergence or convergence, depending on whether the laser beam is focused (in our case by motion of the lens) in front of or inside the target. By calculation of the ray paths and by experimental tests, it was found that the lens could be moved a distance of 3 mm (from arbitrary position 13 to 16 mm, with the focus at the target surface at

15 mm, see figures); an erroneously low reflectance $R_L$ being measured for larger lens motions. This effect has to be considered if one wishes to greatly reduce, by extreme defocusing, the intensity on the target to such low values that the optical properties of the target approach those of the solid state.

Calibration of the detector $R_{diff}$ was considerably more difficult. Though geometric losses do not arise through lens motion (since the target remains fixed in the focus of the mirror) it was clear from inspection that concentric grooves left from machining in some zones of the mirror would probably lead to appreciable scattering losses. An attempt to calibrate the mirror by oblique reflection from a copper target at very low ($< 10^9$ W cm$^{-2}$) intensity showed indeed that at different tilt angles, i.e. irradiation of different zones of the mirror, the calibration factor for $R_{diff}$ varied by as much as $\pm$ 20 %. Therefore a different procedure was attempted: the target was painted with Kodak White Reflectance Paint, which would scatter the laser radiation according to $\cos\Theta$ into the mirror. After verification that at the applied intensities ($< 10^9$ W cm$^{-2}$) calibration was independent of intensity, the scattering paint was used for the final calibration. The resulting calibration factor (consistent with the average of the tilted copper target measurements) should be accurate for situations where the angular distribution of scattered radiation in the actual experiment becomes broad. Our investigations have shown that this is in fact the case with the target at focus. (See Fig. 9.)

We were concerned that the reflectance of the mirror surface would change with time due to deposition of evaporated target material. Calibration of $R_{diff}$ was therefore repeated after termination of the measurements. A slight decrease in reflectivity, which would increase the measured values of $R_{diff}$ by 10 %, was detected. The results have not been corrected for this effect.

The measured values of $R_L$ and T are believed to be accurate within ± 5 %. A conservative estimate for $R_{diff}$ shows that it should be accurate to +20 %, -10 % (most errors lead to losses of scattered light). It should be possible to achieve an accuracy of a few percent for $R_{diff}$, mainly by

inserting a high-quality mirror.

Considerable attention was devoted to the problem of contrast of the laser pulse. By attenuating the laser pulse it was found by target inspection under a microscope that pulses with energies as low as 0.1 to 1 μJ left visible damage in a thin film of Indium, overcoated on a plexiglass target (no damage from amplified spontaneous emission could be observed). Firing the laser at full power into a fast vacuumphotodiode showed that the closed Pockels-cell shutter attenuated the mode-locked pulse train by $\sim 10^{-4}$, but the pulse preceding the switched-out pulse was attenuated by only $\sim 10^{-3}$. Operating the laser in the ns regime showed clearly that the transmittance of the shutter did rise to a level of $\sim 10^{-3}$ about 10 ns before complete transmittance of the shutter occurred. This effect is believed to be due to coupling of the trigger pulse to the Pockels-cell by the internal capacity of the Krytron. Thus, at a level of $\sim$0.3mJ at full power, prepulses became a matter of concern.

Consequently, a dye cell filled with Kodak 9740 dye in chlorobenzene was placed in the laser chain in front of the spatial filter. Test measurements of target reflectivity were performed at full power with a copper target at small signal dye transmissions t of 1, $10^{-2}$ and $10^{-4}$. Note that at $t = 10^{-4}$ total prepulse attenuation should become $10^{-7}$ ($3 \cdot 10^{-8}$ Joule); experimentally the prepulses became undetectable ( $< 10^{-6}$). The tests, performed with the target at focus, showed simply no dependence of reflectance on contrast ratio - even in the case of a metal target. Nevertheless for the final measurements a dye cell with $t = 10^{-2}$ was left in the laser resulting in a measured contrast of $2 \cdot 10^{-5}$ or 6 μJ of prepulse energy. Whereas at this level still some surface damage may occur on the copper target (with no detectable influence on reflectance), we note that the non-absorbing glass target will transmit such prepulses without plasma formation. The similarity between the glass and copper results reported below makes it therefore even more unlikely that the characteristic behaviour seen in this experiment is just a consequence of prepulses.

Despite the care in measurement described above, the experiment became successful and produced the very reproducible reflection curves shown below, only when targets of high (optical) surface quality were used. Diffuse scattering from a target with a poor surface quality, such as commercially avai-

lable copper and plexiglass rods, was found to smear completely the structure of the reflection curves shown below. A target is shown in Fig. 2. A 50 x 5 x 1 mm glass slab, cut from an optical flat, was glued to a straight metal pin serving as a holder. Position of the rear surface of the pin was read with an accuracy of ± 10 μm from a 60x projection. The targets were fabricated with a thickness tolerance (front surface to rear side of pin) of ± 5 μm. Either the bare glass surface (glass measurements) or a ~ 2 μm, vapor deposited copper overcoat (copper measurements) was irradiated by the laser. Vertical, 1 mm motion between shots exposed a fresh surface at each shot. Lens position was read from a micrometer.

During the focal spot measurements we found that the laser beam propagating through the "warm" amplifier chain focused at a position 120 μm away from the focal spot of the "cold" chain. All measurements were therefore made in a series of several tens of shots using the automatic timer of the laser (2 min. interval at full power). After a warm-up period of ~ 5 shots the focus position remained constant.

## Results

In Figs. 3 to 7 we plot measured values of $R_L$, $R_{diff}$, T and the calculated $R_{tot} = R_L + R_{diff} + T$ as a function of lens position in mm. Note that the zero point of the lens position reading is arbitrarily preset, but constant throughout the measurements. The pulse energy was 300 mJ, 14 mJ and 160 (140) μJ; i.e. varied by a factor 2000. The points are averages of 3 to 5 shots at 300 mJ and over 10 shots at low energy (160 μJ). Note also that with increasing lens position the focus moves into the target (see symbols in Fig. 4). The intensities given in some figures are calculated assuming a 10 μm diameter focal spot with a hyperbolic envelope approximation near the focus. They become inaccurate near the focus for a depth of the order of the focal spot diameter (due to diffraction effects, finite accuracy of target positioning, motion of the critical density layer, etc.). They are nevertheless given as an order of magnitude estimate of maximum intensity. Note that the intensity ratio between curves obtained at different pulse energies is determined only by pulse energy and is therefore more accurate.

Fig. 3 shows the reflection of 140 µJ pulses from copper. At the lowest applied intensity of $5 \times 10^9$ W cm$^{-2}$ $R_L$ approaches the metallic reflectance of copper (literature data are between 0.90 and 0.98 at 1.06 µm, depending on surface preparation). With the pulse focused more sharply on the target surface $R_L$ decreases to a minimum value of 0.32. We see in this figure the characteristic behaviour found with all targets and at all pulse energies. When the pulse is sharply focused and $R_L$ decreases to its minimum value, diffuse scattering sets in and limits absorption to lower values than deduced from reflectance back through the focusing optics. With $R_{diff} = 0.14$ we obtain $R_{tot,\,min} = 0.46$ or $A_{max} = 1 - R_{tot,\,min} = 0.54$, the highest absorption obtained in this series of experiments. Note that with a pulse energy of 140 µJ the intensity is only $6 \times 10^{12}$ W cm$^{-2}$.

At a pulse energy of 300 mJ (Fig. 4) this behaviour is more drastic. $R_{diff}$ now increases to a maximum value of 0.41 and dominates reflection losses. The minimum value of $R_L$ has further decreased to 0.16. $A_{max}$ is still 0.50 though pulse energy is $2 \cdot 10^3$ times higher than in the previous case. The intensity is now $1 \times 10^{16}$ W cm$^{-2}$. $R_L$ seems to rise steadily towards metallic reflection with increasing spot size. Note that the reflection curves have broadened from low to high pulse energy.

Thus the effect of intense, point-like laser irradiation on copper is to decrease its nearly perfect metallic reflectivity to about 0.5. Glass, on the other hand (a transparent dielectric at $\lambda = 1.06$ µm), might be expected to become a metallic reflector on intense laser irradiation due to formation of a highly conducting plasma sheath on the surface.

For the sake of clarity we discuss first measurements with glass made at an intermediate pulse energy (14 mJ, Fig. 5). In fact, $R_L$ increases from its low-intensity value (0.08 from a two interface glass sheet according to the Fresnel formulas) up to a maximum of 0.59. At the same time the transmittance T decreases to practically zero. At focus, in a range of $\sim$200 µm, $R_L$ drops sharply to a much lower value of 0.23. In the same range $R_{diff}$ rises strongly, in a manner similar to that for copper.

Figure 6 shows the behaviour at 300 mJ. The glass has become highly reflecting with $R_L$ in the range 0.5 to 0.6 on both sides of the focus (note that for lens positions greater than 16 mm the detector $R_L$ measures an anomalously low value due to geometrical cutoff). At focus $R_L$ has an even deeper minimum and $R_{diff}$ has become dominant as in the full-energy copper case; $R_{tot}$ and hence absorption is very weakly dependent on intensity. In the flat minimum at focus the maximum absorption is 0.45. With plexiglass the maximum absorption was 0.37 under the same conditions.

With glass we found a peculiarity - surprising at first glance - which became prominent at reduced pulse energy (14 mJ and 160 μJ), where the range of plasma reflection is bounded on both sides by the normal solid state optics behaviour of glass. The curves $R_{tot}$ in Fig. 5 and 7 (from left to right) drop from 1 to about 0.5 at focus (corresponding to the maximum absorption of $\sim$ 0.5 found under all conditions) and then tend to rise again. However, there is then a further drop to $R_{tot}$ = 0.3. It is only at lens position 15.7 to 15.8 that $R_{tot}$ rises steeply to one (Fig. 7; a similar behaviour is seen in Fig. 5). There is a natural explanation for this. When the focus is moved from the surface towards the interior of the glass target, the intensity on the surface is reduced and it begins to transmit laser light. Since the laser light comes to focus inside the glass, it may become trapped in self-focusing filaments or simpely refracted and is either absorbed or scattered into angles larger than covered by the detector T. It is only when the focus is beyond the rear surface of the 1 mm glass target that the radiation is fully transmitted. In fact, the width of $R_{tot}$ should then be slightly larger than d/n = 0.7 mm; where d is the glass thickness (1 mm) and n is the index of refraction (1.4); in agreement with the measurements. In addition self-focusing traces have been observed with microscopic inspection. The possibly enhanced absorption in this range seems of no interest in the context of laser fusion.

Finally, Fig. 8 shows the distribution of scattered laser radiation, photographed on Kodak IZ plates by a camera focused from the rear onto the inner surface of the elliptical mirror (the camera replaced the $R_{diff}$ detector for this purpose). It is apparent that (at focus) the scattered

radiation has a very broad angular distribution. It fills nearly the whole mirror. The upper and lower photographs were taken under defocused, but otherwise identical conditions. Diffuse scattering is now absent (to save space the other zones of these photographs have been cut away), but a brigth reflection from the lens indicates that reflection back through the lens is now much stronger. This is the behaviour expected from Fig. 4.

## Summary

Reflection losses from plane targets irradiated by 30 ps pulses from a Nd-YAG laser ($\lambda$ = 1.06 µm) have been measured for pulse energies in the range $0.14 \times 10^{-3}$ to 0.3 Joule with a corresponding range in intensity from $5 \times 10^{9}$ W cm$^{-2}$ up to $10^{16}$ W cm$^{-2}$. After careful control of the experimental conditions, very reproducible behaviour was found over the whole range of intensities.

Except for a transition range in intensity where reflection depends on the original dielectric properties of the target material, high-intensity irradiation leads to a universal behaviour. Under all conditions applied in this experiment, maximum absorption was in the range 0.37 to 0.55 with very weak dependence on pulse energy and target material /1/. Perhaps the most prominent feature detected in these experiments is strong scattering of laser radiation outside the solid angle of the lens, which occurs with sharp focusing on the front surface of the target; i.e. at the highest irradiation intensities. The present investigation proves that these losses have to be taken into account if absorption in the target is to be accurately measured optically.

Reflectivity measurements including diffuse scattering as reported here reveal a basically simple behaviour of the laser irradiated targets, though this becomes obvious only by meticulous experiments. The experimental data are given here without further interpretation as a contribution towards a catalogue of reliable data with respect to the absorption problem in laser-heated plasmas. Reduction and theoretical interpretation is beyond the scope of the present paper.

References

/1/ The results reported here seem to be in substantial agreement with measurements reported at the 10th European Conference on Laser Interaction with Matter, Ecole Polytechnique, Palaiseau, France, 18 to 22 October 1976 by Lawrence Livermore Laboratory (Reports LLL UCRL - 77943 Rev 1 and LLL UCRL - 77730.)

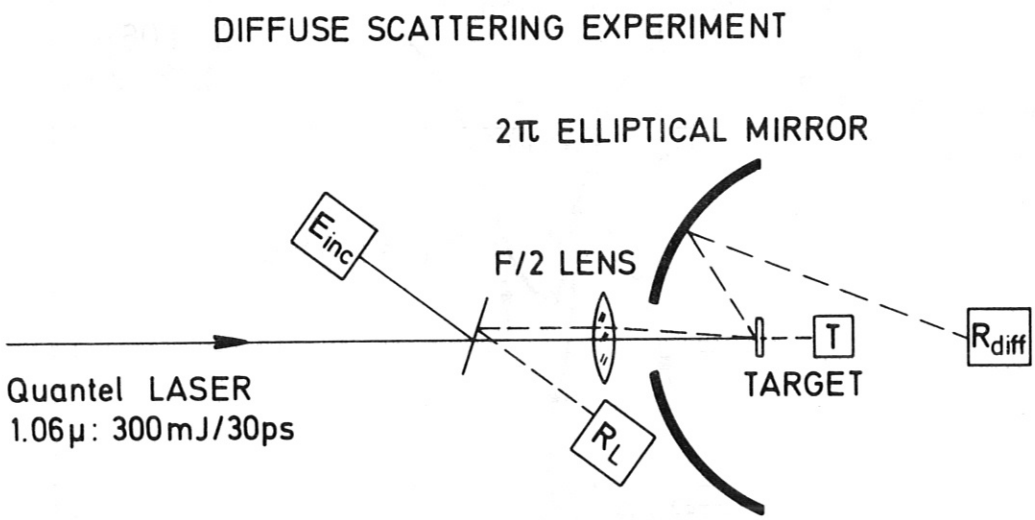


Fig. 1: Schematic diagram of the diffuse scattering experiment.

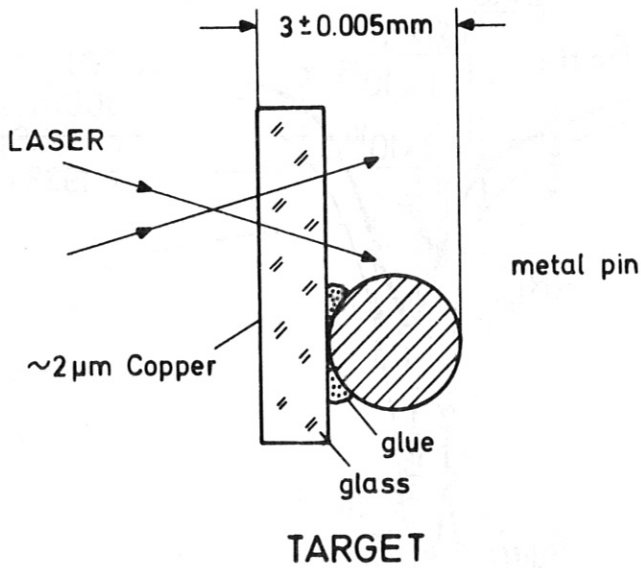


Fig. 2: Target construction

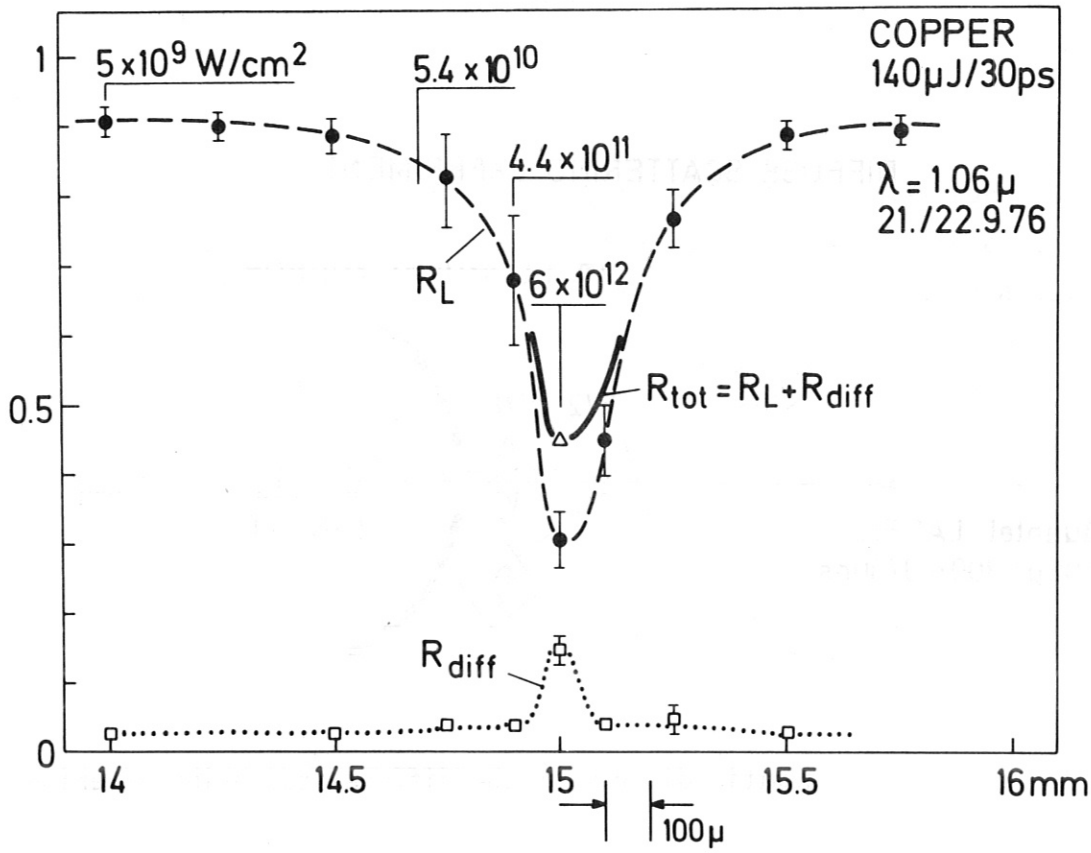


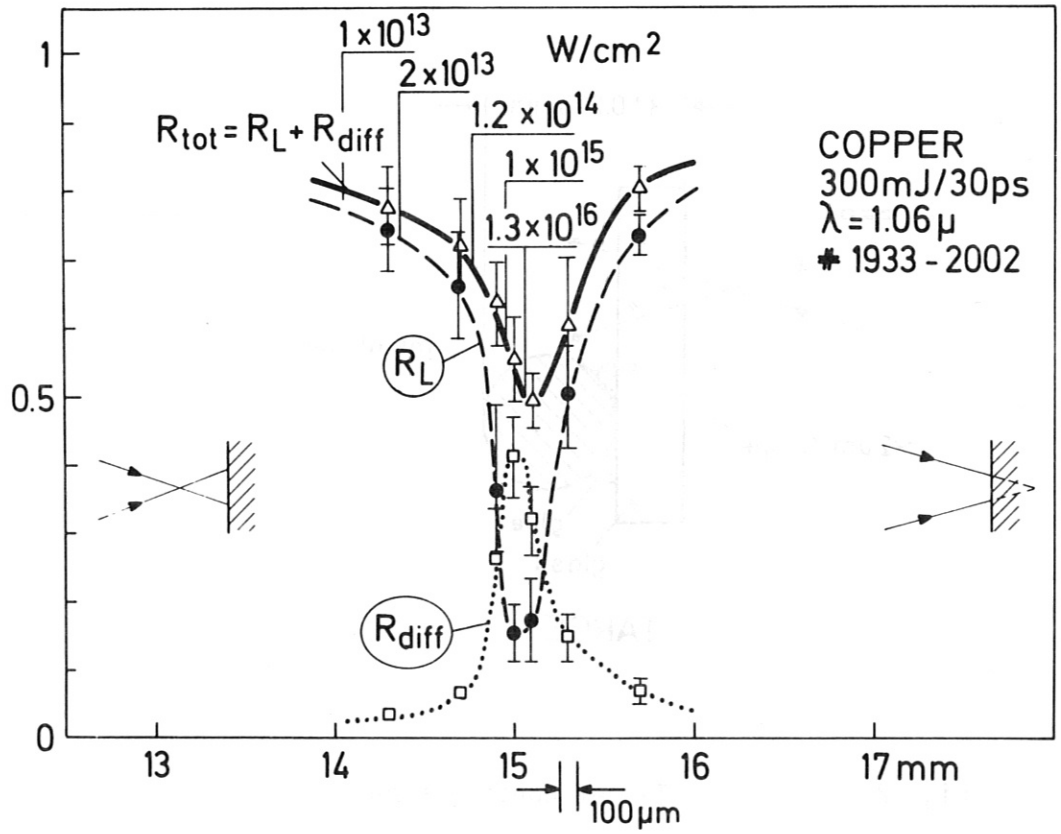


Fig. 3 + 4 Backscattering into the focusing optics ($R_L$), diffuse reflection into mirror ($R_{diff}$), target transmittance (T) and calculated total "reflection" losses ($R_{tot} = R_L + R_{diff} + T$).

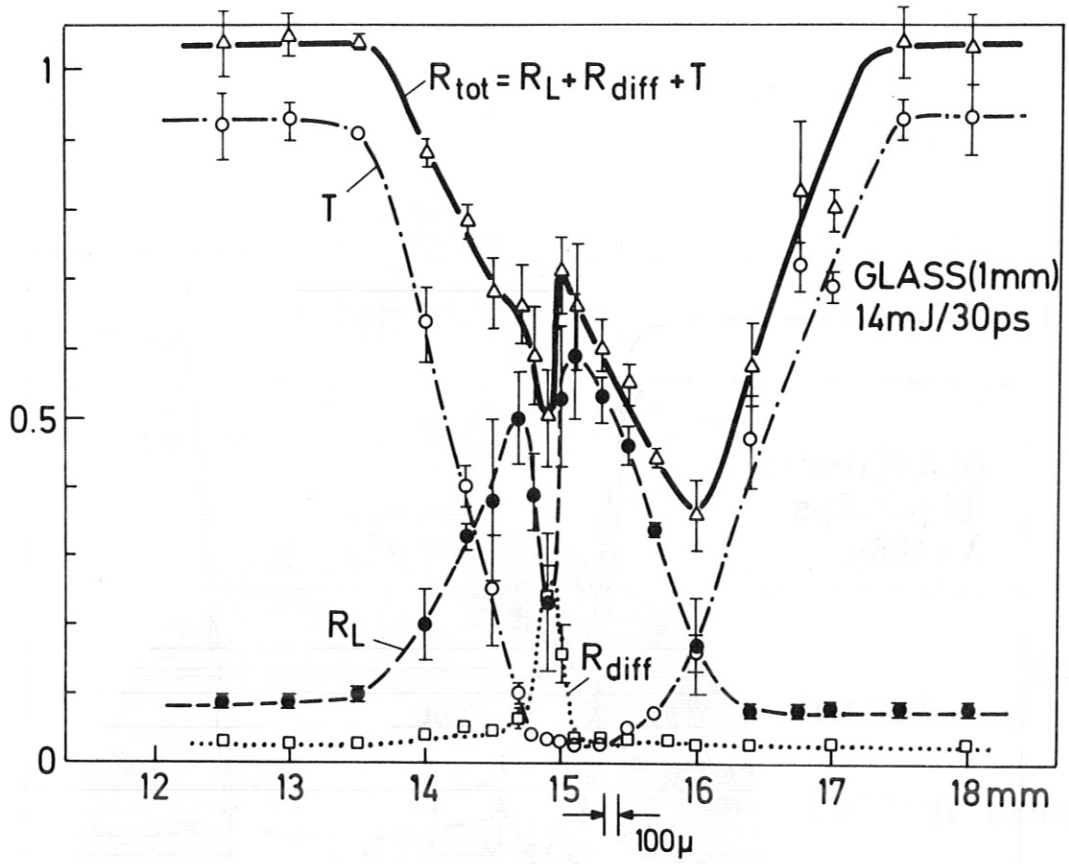


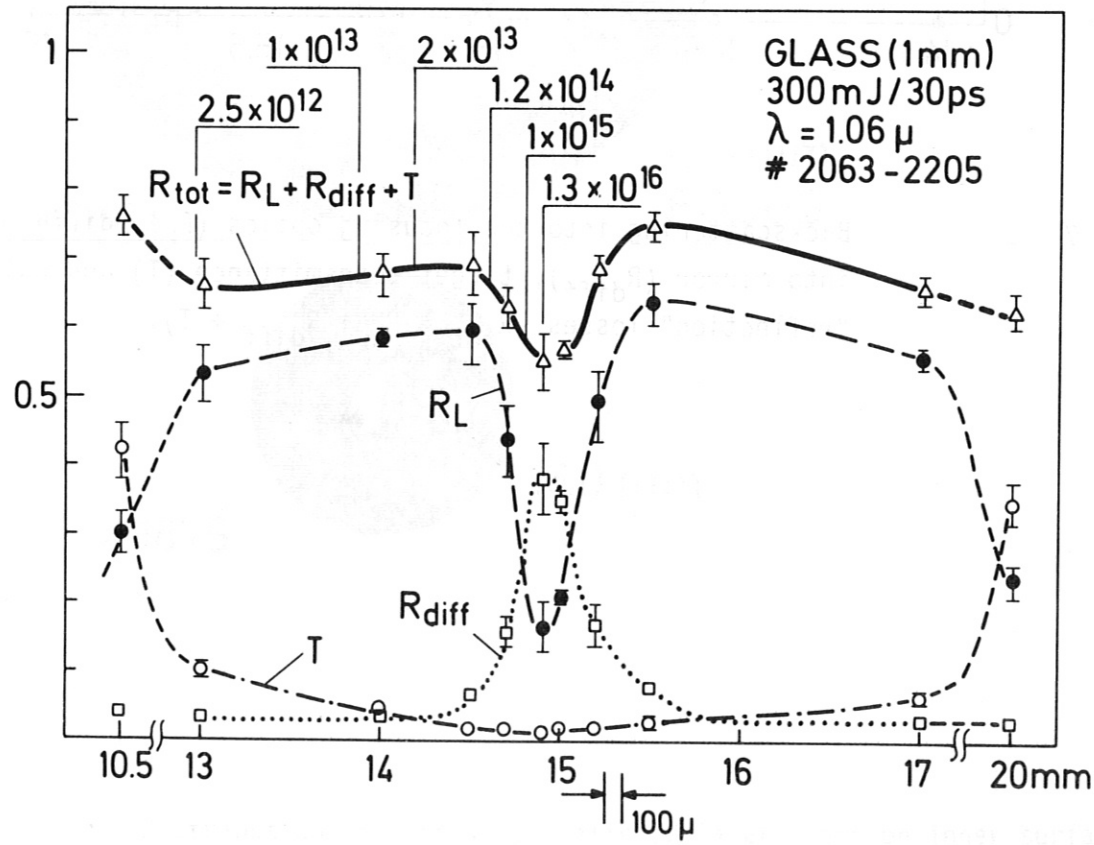


Fig. 5 + 6 Backscattering into the focusing optics ($R_L$), diffuse reflection into mirror ($R_{diff}$), target transmittance (T) and calculated total "reflection" losses ($R_{tot} = R_L + R_{diff} + T$).

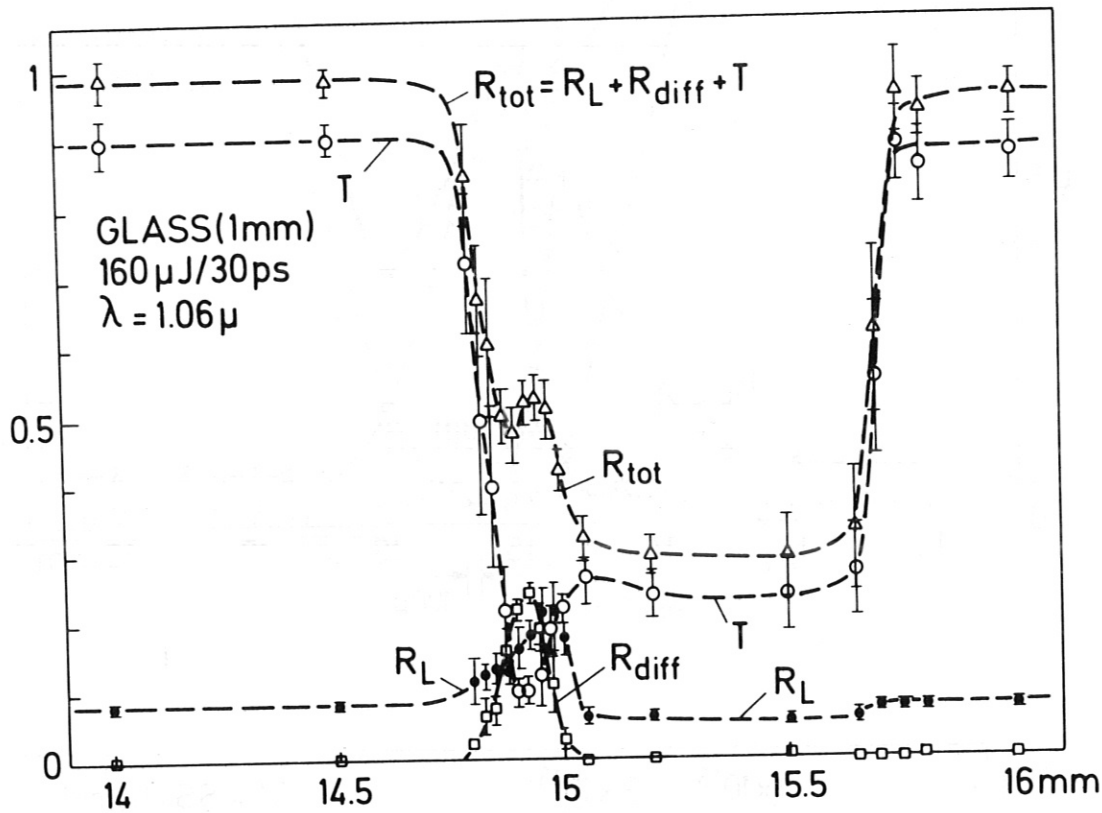


Fig. 7 Backscattering into the focusing optics ($R_L$), diffuse reflection into mirror ($R_{diff}$), target transmittance (T) and calculated total "reflection" losses ($R_{tot} = R_L + R_{diff} + T$).

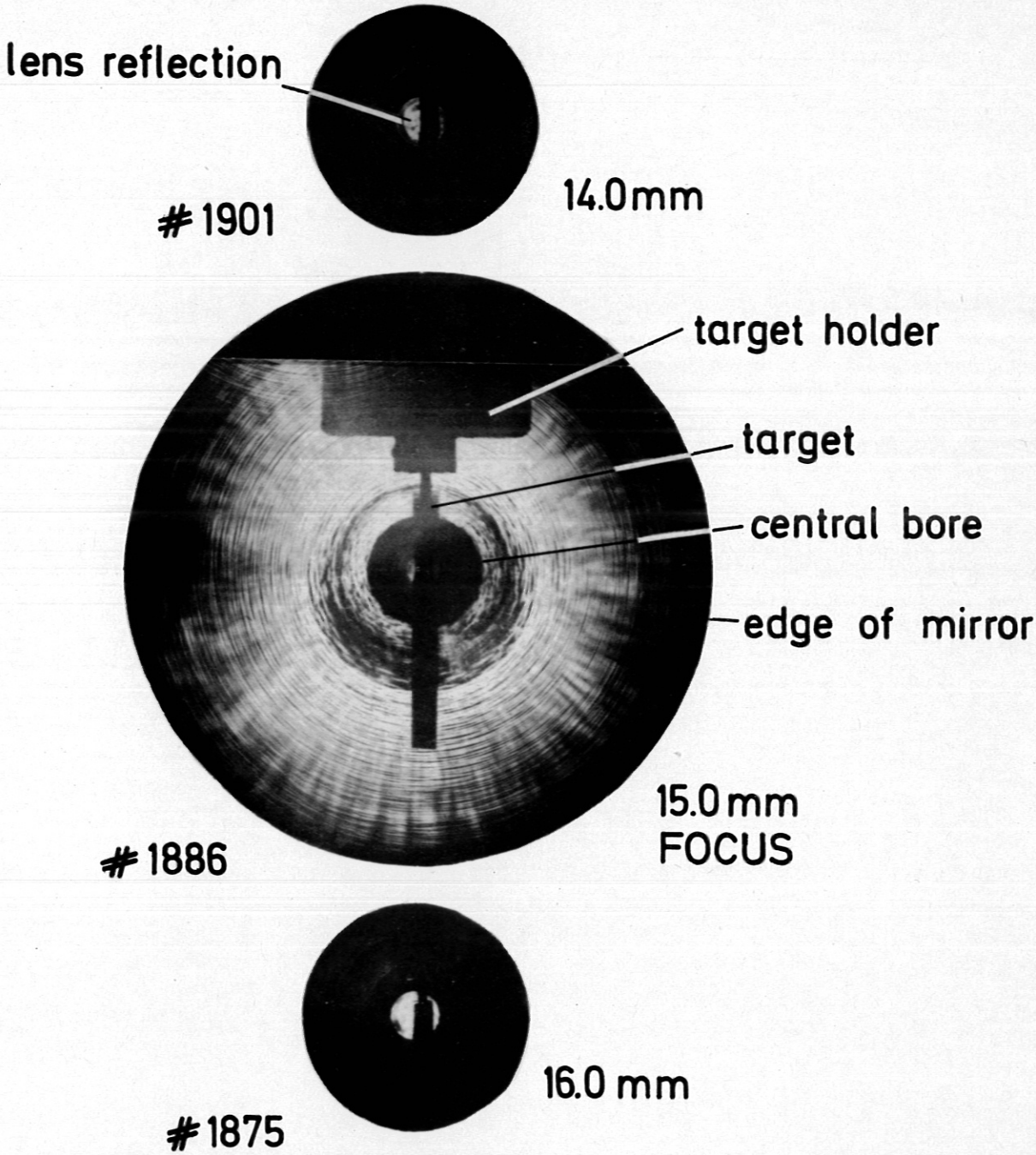


Fig. 8: Distribution of diffusely scattered laser light on inner surface of the ellipsoidal mirror for different focusing conditions. All three infrared photographs have the same scale. Copper target.